DESCRIPTION – STRAIGHT WAVEGUIDE ASSY WR 137

PART NO – SM018W137SW306

REF BEL PART NO – 455043790118

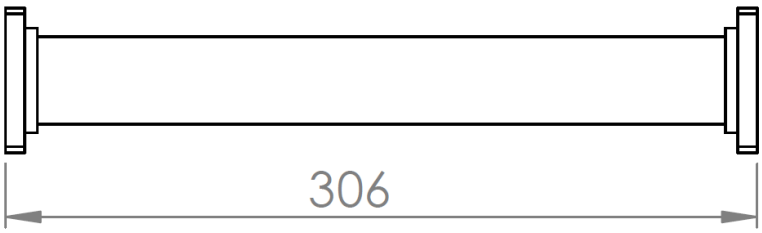

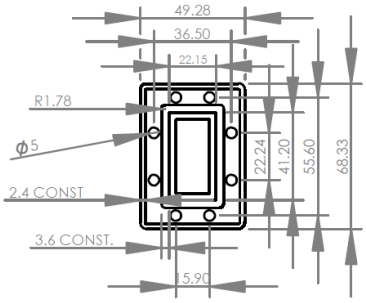

FLANGE DETAIL

ELECTRICAL SPECIFICATION –

1. FREQUENCY RANGE – 5.85 to 8.2 GHz
2. VSWR – 1.15 (Max.)
3. INSERTION LOSS – 0.06dB (Max.)
4. POWER – 10 KW

MECHANICAL SPECIFICATION –

1. WAVEGUIDE SIZE – WR137
2. MATERIAL – BRASS/COPPER
3. FLANGE 1 – CPR137 (G)
4. FLANGE 2 – CPR137
5. PRESSURE – 10Psi
6. FINISH – CORROSION TREATMENT

NOTE: - ALL REQUIRED FASTENERS & MATCHING O – RING GASKET ARE TO BE SUPPLIED ALONG WITH WAVEGUIDE